INSTALLATION AND INTEGRATION GUIDE

EMB-910003

Tri-Band Monopole Antenna for 2.4/5/6 GHz Wi-Fi

Embedded Wi-Fi Antennas

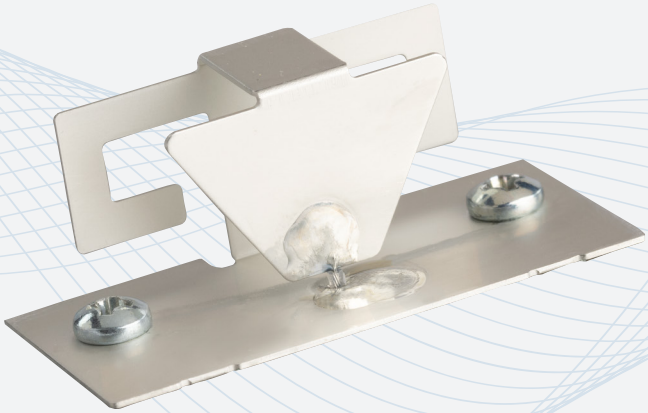

Table of Contents

Referenced Documents 3

1. Overview 3

2. Host Interface 3

3. Securing the Antenna 4

4. Integration 5

4.1. Orientation 5

4.2. Return Loss Dependence on Radome Separation 6

4.3. Radiation Pattern Shape Versus Ground Plane Size 7

4.4 Managing Obstructions 8

5. Application Example 9

6. Choosing the Right Embedded Antenna 11

Referenced Documents

Document	Description
PCTEL® EMB-910003 Datasheet	Tri-Band Monopole Antenna for 2.4/5/6 GHz Wi-Fi

1. Overview

EMB-910003 is a vertically-polarized, omnidirectional antenna assembly that covers the 2.4 GHz, 5 GHz, and 6 GHz Wi-Fi bands. It is designed for use on multi-antenna platforms where polarization diversity and element-to-element isolation are key objectives. The element is terminated in a micro-coaxial cable having a U.FL-style connector and is fastened to an external metallic surface in the host product using two #3-48 machine screws.

The purpose of this document is to help end users install and properly integrate the assembly to ensure quality RF performance. The forthcoming sections describe how to mechanically secure and properly integrate the antenna assembly.

Additional information can be found in the PCTEL EMB-910003 Datasheet.

2. Host Interface

EMB-910003 is terminated in a U.FL-style plug connector following a six-inch run of micro-coaxial cable. The host interface must be a surface mount U.FL-style receptacle in order to mate with the plug connector. PCTel recommends using surface mount receptacle U.FL-R-SMT-1 that is supplied by Hirose Electric Co., Ltd. It is a 50 Ω characteristic impedance part that can be used to transition from a coaxial transmission line to microstrip or to another planar transmission line.

3. Securing the Antenna

The antenna may be fastened to an external metallic surface (ground plane) using #3-48 pan head machine screws. It is not recommended to mount the antenna to a non-metallic surface. It is important that the base of the element, particularly near the short circuit leg, contacts the ground plane, and this is accomplished easily by mounting the antenna to a flat surface. Additionally, the outer diameter of the clearance hole for the coaxial cable should be 4 [mm] so that the U.FL-style plug connector can pass through into the radio area. Figure 1 shows an exploded view of the antenna assembly and its mounting hardware.

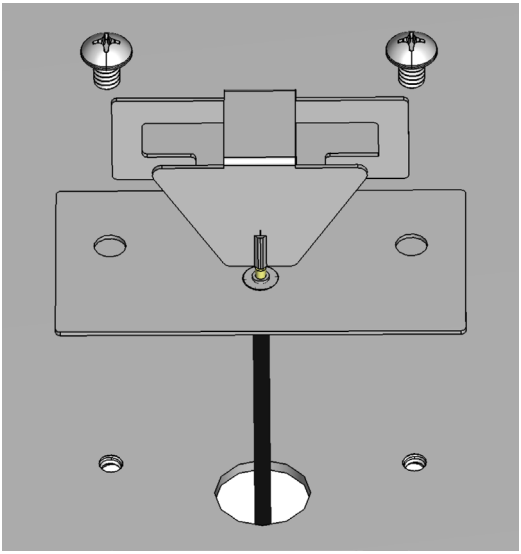

Figure 1: Exploded view of EMB-910003 and its associated mounting hardware.

4. Integration

4.1. Orientation

Care must be taken in the integration of embedded antennas and the first point to consider is the orientation of the antenna element within the wireless product. Proper orientation of an antenna element matches the radiation pattern of the antenna to the target coverage area of the application. The simulated three-dimensional radiation pattern of EMB-910003 at 5.5 GHz is given below in Figure 2. Observe that the antenna is omnidirectional in the x-y plane (red and green axes).

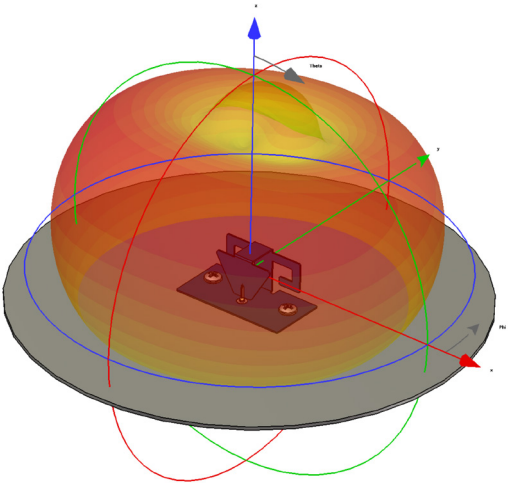

Figure 2: Three-dimensional radiation pattern of EMB-910003.

The antenna achieves its peak radiation in the plane that lies 45° off the z-axis (blue) that is also parallel to the x-y plane. These qualities of the radiation pattern make the antenna suitable for applications requiring omnidirectional coverage with a slight up-tilt or down-tilt, depending on the final orientation of the product. For instance, the pattern shown in Figure 2 would be suitable for an antenna integrated in a product that is deployed on a low ceiling (8' -12'). The pattern would be inverted from what is depicted in Figure 2 so that the z-axis would point straight down to the floor.

4.2. Return Loss Dependence on Radome Separation

The simulated return loss of the antenna is given below in Figure 3 for a variety of radome separations from the antenna PCB. It is assumed that the radome is 2.5 [mm] thick and is a polycarbonate/ABS blend. The radome separation is defined as the distance in millimeters between the bottom of the radome and the top of the PCB. In practice, a radome separation between 3 – 6 [mm] gives the best impedance match. The smallest practical radome offset is limited by the maximum deflection the radome is expected to undergo, either in the field or during mechanical impact testing. The element's wide impedance bandwidth at 2.4 GHz allows for flexibility in the radome design, since the antenna demonstrates good matching independent of the radome spacing.

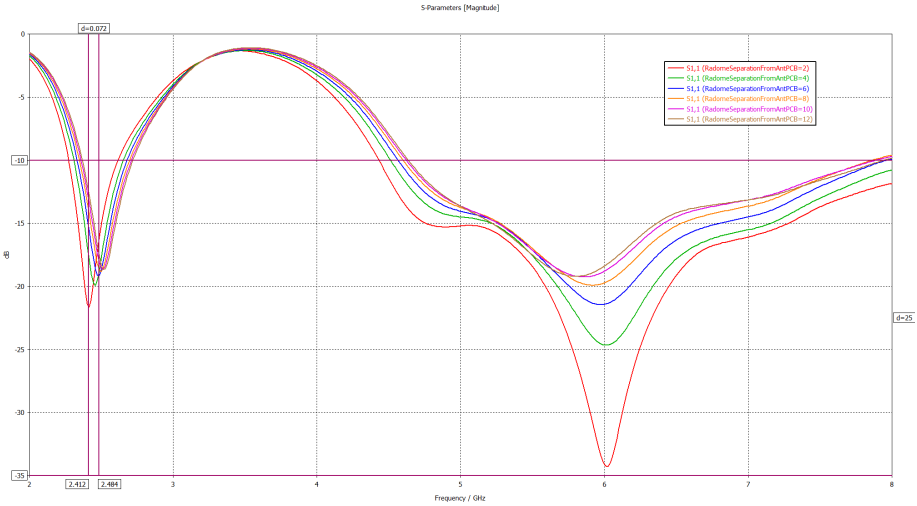

Figure 3: Simulated return loss versus radome separation from the antenna PCB.

4.3. Radiation Pattern Shape Versus Ground Plane Size

The extent of the ground plane underneath the antenna impacts the return loss, elevation plane beamwidth, and the amount of energy radiated to the horizon in the low frequency band (2.4 GHz). We sweep the ground plane radius to understand its impact on return loss and to determine how much ground plane is required for a given up-tilt to the radiation pattern shape. These results are provided in Figures 4 and 5, respectively.

First, we note that above 5 GHz, the return loss and radiation patterns are stable for ground plane sizes just large enough to accommodate the antenna's footprint. The results in Figure 4 suggest that the antenna should be surrounded by at least 45 [mm] of ground plane to achieve adequate return loss at 2.4 GHz. In practice, this may not be feasible, since it is often necessary to place antenna elements near corners or edges (e.g., see the Application Example). A practical rule of thumb is to place the antenna such that the average extent of the ground plane underneath the antenna over all directions is at least 45 [mm]. In most cases, this will ensure good return loss and radiation patterns.

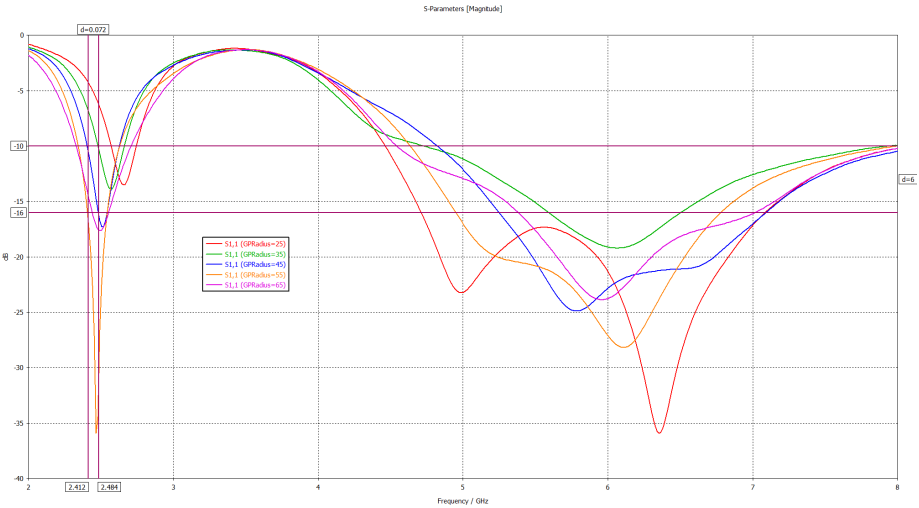

Figure 4: Return loss plots for different values of the ground plane radius.

In Figure 5, we observe that the 0 dBi crossover point at 45° above the horizon occurs when the ground plane radius reaches 45 [mm], further grounding the rule of thumb. Observe that the peak gain decreases as the radius of the ground plane is reduced, however the gain at the horizon (90° at two points on the plot) increases up to a point. The uptilt in the elevation plane pattern is a clear function of the extent of ground plane underneath the antenna and increases with the size of the ground plane.

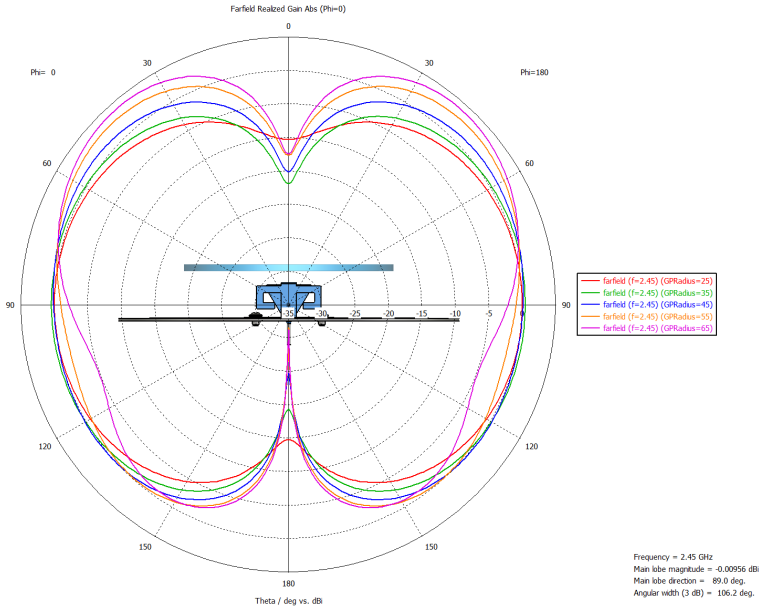

Figure 5: Elevation plane cuts at 2.45 GHz for different values of the ground plane radius.

4.4 Managing Obstructions

Metallic obstructions, if large enough, close enough, and oriented properly, will alter the radiation performance of any antenna. Still, EMB-910001 is resilient to the detuning effects of metallic obstructions, particularly those that are vertically-oriented and perpendicular to its circuit board (this is because the antenna is horizontally-polarized). In general, the total efficiency will not be affected by large metallic obstructions that are at least 1" from the edge of the antenna PCB even if the radiation patterns are changed. Ideally, the antenna should not be loaded from the top by metal (where the radome is typically located), and, if possible, the plane of the antenna PCB should be kept free from obstructions so the antenna can freely radiate in the azimuth plane.

5. Application Example

Let's consider an application example of a ceiling-mounted access point consisting of four EMB-910001 antennas and four EMB-910003 antennas. The EMB-910001 antennas operate over the 5 GHz band while the EMB-910003 antennas operate over the 2.4, 5, and 6 GHz bands. This is a cross-polarized antenna system that achieves high isolation (< -40 dB) between the two sets of antennas. Therefore, with an appropriate radio architecture, it is possible to operate dual-concurrent 5 GHz radios, dual-concurrent 5 and 6 GHz radios, or 8x8:8 over 5 GHz. In each of these scenarios, 4x4:4 is possible at 2.4 GHz. A model of the antenna system is provided below in Figure 6.

Figure 6: Cross-polarized antenna system consisting of the EMB-910001 and EMB-910003 antennas.

Because of the symmetry of the antenna system in Figure 6, it suffices to show data for a single EMB-910003 port (this is port #1 – the horizontally-polarized elements are ports #5 – #8). Isolation data and two three-dimensional radiation patterns are shown below in Figures 7, 8, and 9, respectively. The radiation pattern data is taken at 5.5 GHz. Good decoupling between the cross-polarized antennas and solid radiation performance are demonstrated. Observe, in Figure 9, that the radiation patterns are highly complementary yet omnidirectional, and therefore, well-suited to MIMO and MU-MIMO applications.

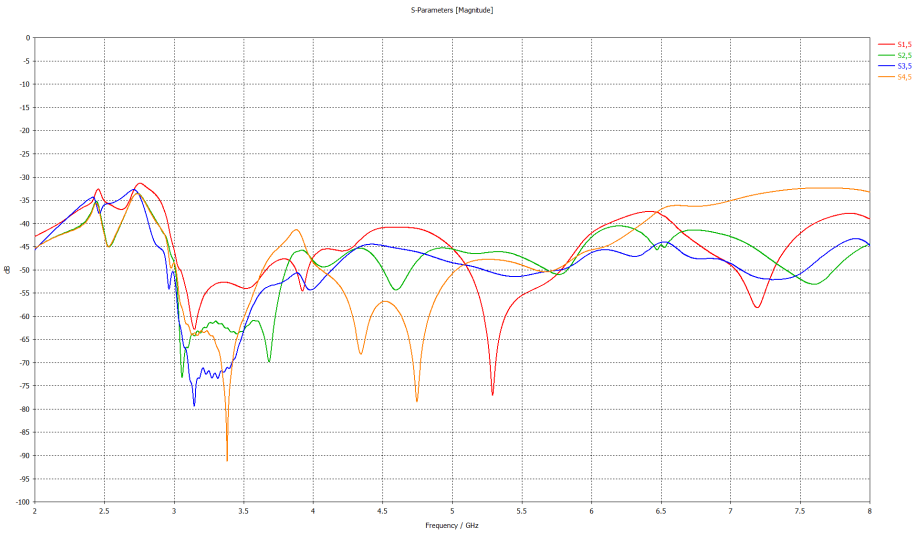

Figure 7: Isolation data from one EMB-910003 antenna to four EMB-910001 antennas.

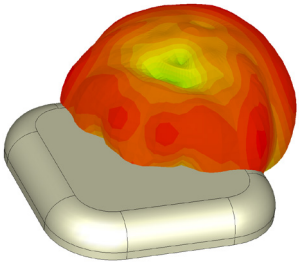

Figure 8: Three-dimensional radiation pattern of one of the EMB-910003 assemblies.

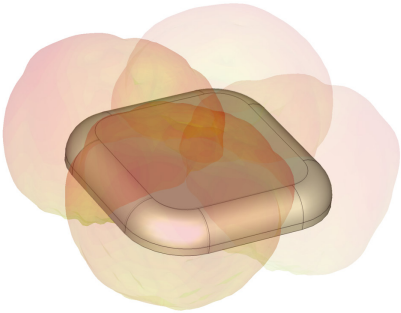

Figure 9: Overlapped three-dimensional radiation patterns of all four EMB-910003 assemblies.

6. Choosing the Right Embedded Antenna

The implementation of antennas that radiate monopolar radiation patterns works well in practice when the distance from the access point to the client is short when the client is in the null-beamwidth of the antenna (at the top of the radiation pattern); the low gain of the antenna at that incident angle is offset by the low path loss. In the case of a ceiling mounted access point, this happens when the ceilings are low, like in an office space or airport. The use of monopolar radiation patterns directs more energy to the horizon, which generally supports a larger coverage area than if directional antennas are used. With that said, monopolar antennas are not ideal for high-ceiling deployments such as those found in retail and industrial settings, since the null-beamwidth extends over a larger coverage area. These applications require a broadside radiator: an antenna that radiates energy perpendicular to the face of the product. PCTEL offers EMB-910002 to serve this purpose.

The choice and proper integration of an embedded antenna is a custom exercise. Many wireless products possess significant mechanical and material differences that can complicate the integration of embedded antennas. Still, it is oftentimes possible to leverage aspects of the host product to achieve efficient operation and tailored radiation performance for the application. PCTEL is happy to assist with the selection, integration, and customization of embedded antennas. Please contact your local PCTEL sales representative for more information.

Product Usage

UPDATED AUGUST, 2021

THE PRODUCTS ARE NOT DESIGNED, MANUFACTURED, OR INTENDED FOR USE, ALONE OR WITH OTHER PRODUCTS, IN ANY APPLICATION REQUIRING FAIL-SAFE PERFORMANCE OF THE PRODUCTS AND/OR IN WHICH A MALFUNCTION OR A FAILURE OF THE PRODUCTS COULD LEAD TO DEATH, PERSONAL INJURY, OR SERIOUS PHYSICAL OR ENVIRONMENTAL DAMAGE, INCLUDING BUT NOT LIMITED TO (A) SURGICALLY IMPLANTED DEVICES, LIFE SUPPORT MACHINES, LIFE PRESERVING MEDICAL DEVICES OR SYSTEMS, OTHER MEDICAL AND SURGICAL APPLICATIONS, OR ANY DEVICES, MACHINES, SYSTEMS, PRODUCTS, OR PROCESSES REQUIRING APPROVAL, TESTING OR CERTIFICATION BY THE U.S. FOOD AND DRUG ADMINISTRATION OR A SIMILAR GOVERNMENTAL ENTITY; (B) AIR TRAFFIC CONTROL OR AIRCRAFT SYSTEMS; (C) CONTROL EQUIPMENT FOR NUCLEAR OR OTHER POWER GENERATION FACILITIES; OR (D) MISSILE, NUCLEAR, BIOLOGICAL, OR CHEMICAL WEAPONS, OR OTHER MILITARY APPLICATIONS (EACH A **"PROHIBITED USE"**).

ANY AND ALL PROHIBITED USE OF THE PRODUCTS IS STRICTLY PROHIBITED, AS IS ANY SALE OR RESALE OF THE PRODUCTS FOR A PROHIBITED USE. PCTEL SHALL HAVE NO LIABILITY FOR ANY USE OF THE PRODUCTS IN ANY MANNER FOR, OR IN CONNECTION WITH, A PROHIBITED USE. ANY SUCH USE SHALL VOID ANY WARRANTIES AND INDEMNITIES PROVIDED BY PCTEL, AS WELL AS ALL OTHER OBLIGATIONS OF PCTEL, INCLUDING, WITHOUT LIMITATION, WITH RESPECT TO SUPPORT. PCTEL SHALL NOT BE DEEMED TO HAVE CONSENTED TO OR APPROVED ANY PROHIBITED USE BY PROVIDING WARRANTY, SUPPORT, OR ANY OTHER SERVICE. ANY PARTY USING THE PRODUCTS IN A PROHIBITED USE SHALL INDEMNIFY AND HOLD HARMLESS PCTEL FROM ANY CLAIMS, LIABILITIES, AND EXPENSES ARISING IN CONNECTION WITH SUCH PROHIBITED USE.

This Integration Guide is subject to change. PCTEL legal terms and conditions apply. Please see https://www.pctel.com/legalinfo/

Need help?

For additional information on the EMB-910003, please contact your local PCTEL distributor:

> pctel.com/contact/distributors/

PCTEL, Inc.

T: +1 630 372 6800 | pctel.com | NASDAQ: PCTI

Specifications subject to change without notice. ©2023 PCTEL, Inc. All rights reserved. (October 2023)